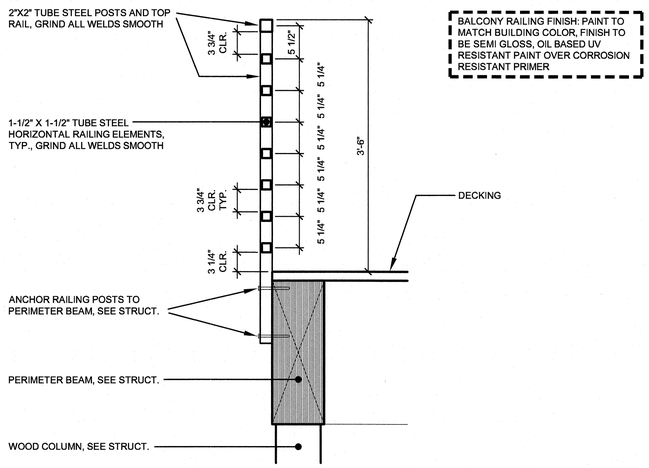

BALCONY RAILING FINISH: PAINT TO MATCH BUILDING COLOR, FINISH TO BE SEMI GLOSS, OIL BASED UV RESISTANT PAINT OVER CORROSION RESISTANT PRIMER

3 DETAIL: BALCONY RAILING

1" = 1'-0" NOTE:

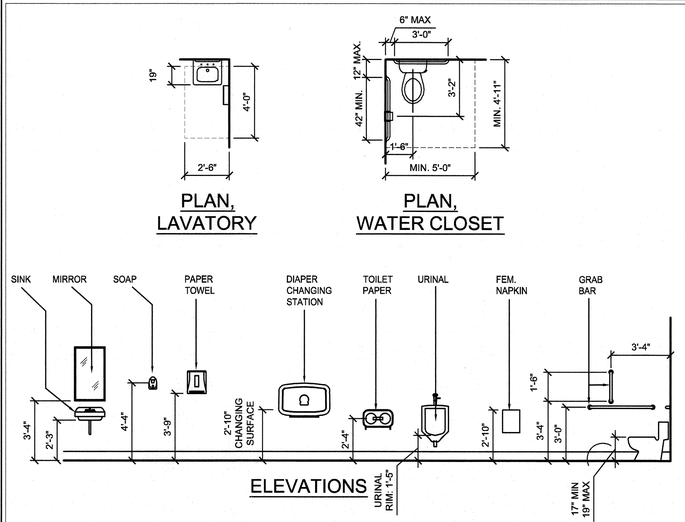

4 ADA BATHROOM STANDARDS

1/4" = 1'-0" NOTE:

REGULATORY AUTHORITIES

BUILDING: SUMMIT COUNTY BUILDING INSPECTION DIVISION
37 PEAK ONE RD (SCR 1005)
FRISCO, CO 80443
TEL: (970) 668-3170

PLANNING: DILLON PLANNING DEPARTMENT
275 LAKE DILLON DR.
DILLON, CO 80435
TEL: (970) 262-3405

FIRE DEPT: LAKE DILLON FIRE RESCUE
0035 COUNTY SHOPS RD,
FRISCO, C0 80443
TEL: (970) 262-5100

PROJECT CONTACTS

OWNER: KEVIN FAULKNER
BROWN & ASSOCIATES
7687 W. 88TH AVE.
ARVADA, CO 80005
TEL: (970) 470-3811

ARCHITECT: JOHN SPONSELLER
ETHOS ARCHITECTURE GROUP
8025 W 25TH PLACE
LAKEWOOD, CO 80214
TEL: (303) 815-0161

STRUCTURAL ENGINEER: COLETTE SMITH
RMG ENGINEERS
49 Y RD.
SILVERTHORNE, CO 80498
TEL: (970) 673-9508

SHEET INDEX

ARCHITECTURAL

A0 COVER SHEET, CODE STUDY, DETAILS
A1 LOWER LEVEL & MAIN LEVEL FLOOR PLANS

STRUCTURAL

S1 STRUCTURAL FRAMING PLANS
S2 STRUCTURAL DETAILS

PROJECT SCOPE

312 SF BALCONY ADDITION TO 1,058 SF MAIN LEVEL RETAIL SPACE. FLOOR INFILL & STAIR DEMOLITION AT MAIN LEVEL RETAIL SPACE TO SEPARATE MAIN LEVEL SPACE FROM 1,524 SF LOWER LEVEL TENANT SPACE.

MATERIALS & SYMBOLS

EARTH
FINISH WOOD
PLYWOOD
PLASTER OR GYPSUM BOARD
CONCRETE
BATT INSULATION
RIGID INSULATION
CONTINUOUS WOOD CONSTRUCTION
DISCONTINUOUS WOOD BLOCKING
CONCRETE BLOCK
BRICK
GRAVEL/BALLAST
METAL

7 DOOR NUMBER
1 EQUIPMENT NUMBER
1 KEY NOTE
A WINDOW TYPE
21 KITCHEN EQUIPMENT NUMBER
UTENSIL 102 ROOM/SPACE NUMBER
13 FURNITURE NUMBER
5 MISCELLANEOUS EQUIPMENT NUMBER
1B WASHROOM & KITCHEN ACCESSORIES NUMBER
1 A200 ELEVATION REFERENCE

N PLAN NORTH
1 A200 SECTION/DETAIL REFERENCE
W1 WALL TYPE
1 A300 WALL SECTION REFERENCE

MODEL CODES

- SUMMIT COUNTY BUILDING DIVISION HAS ADOPTED 2012 INTERNATIONAL CODES, AMENDED FOR LOCAL CONDITIONS
- 2017 NATIONAL ELECTRICAL CODE (NEC)

CODE SUMMARY

1. TYPE OF CONSTRUCTION: TYPE 5-B, FULLY SPRINKLERED
2. BUILDING AREA
   ALLOWABLE: 6,000 SF
   ACTUAL: 1,058 SF (MAIN LEVEL)
   1,524 SF (LOWER LEVEL)
3. EXITS REQUIRED: 1 PER TENANT, EXITS PROVIDED: 1 PER TENANT.

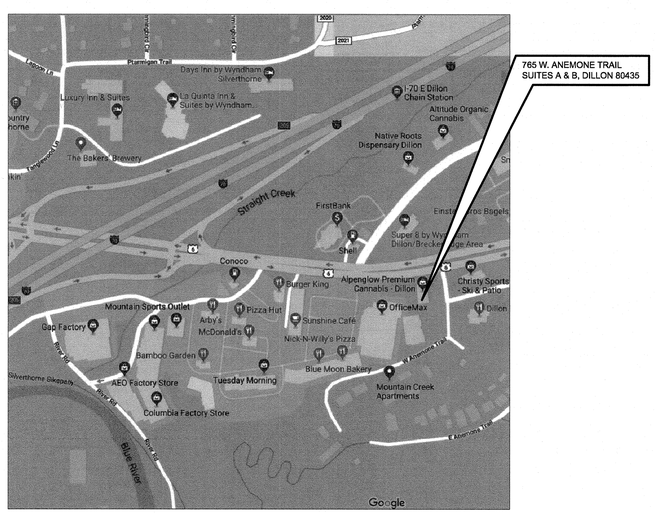

N

2 VICINITY MAP

N.T.S. NOTE:

N

1 SITE PLAN

N.T.S. NOTE:

CONSULTANT:
ethos ARCHITECTURE GROUP
8025 W. 25TH PL
LAKEWOOD, CO 80214
TEL: (303) 815-0161
WEB: www.ethos-arch-group.com

STATE OF COLORADO
JOHN SPONSELLER
203458
LICENSED ARCHITECT

GORE RANGE PLAZA
PARTIAL SHELL REMODEL
765 W. ANEMONE TRAIL
UNITS A & B
DILLON, CO 80435

Issue Record:

8.22.2019	FOR PLAN REVIEW

Revisions:

Drawn:
DRAWN BY: JS, KC

Checked:
CHECKED BY: JS

Project No.
19-218

Contents:
COVER, CODE, DETAILS

A0

Date of Last Print:
8.22.2019

GENERAL NOTES

1. REVIEW ALL EXTERIOR AND INTERIOR FINISHES WITH BUILDING OWNER.

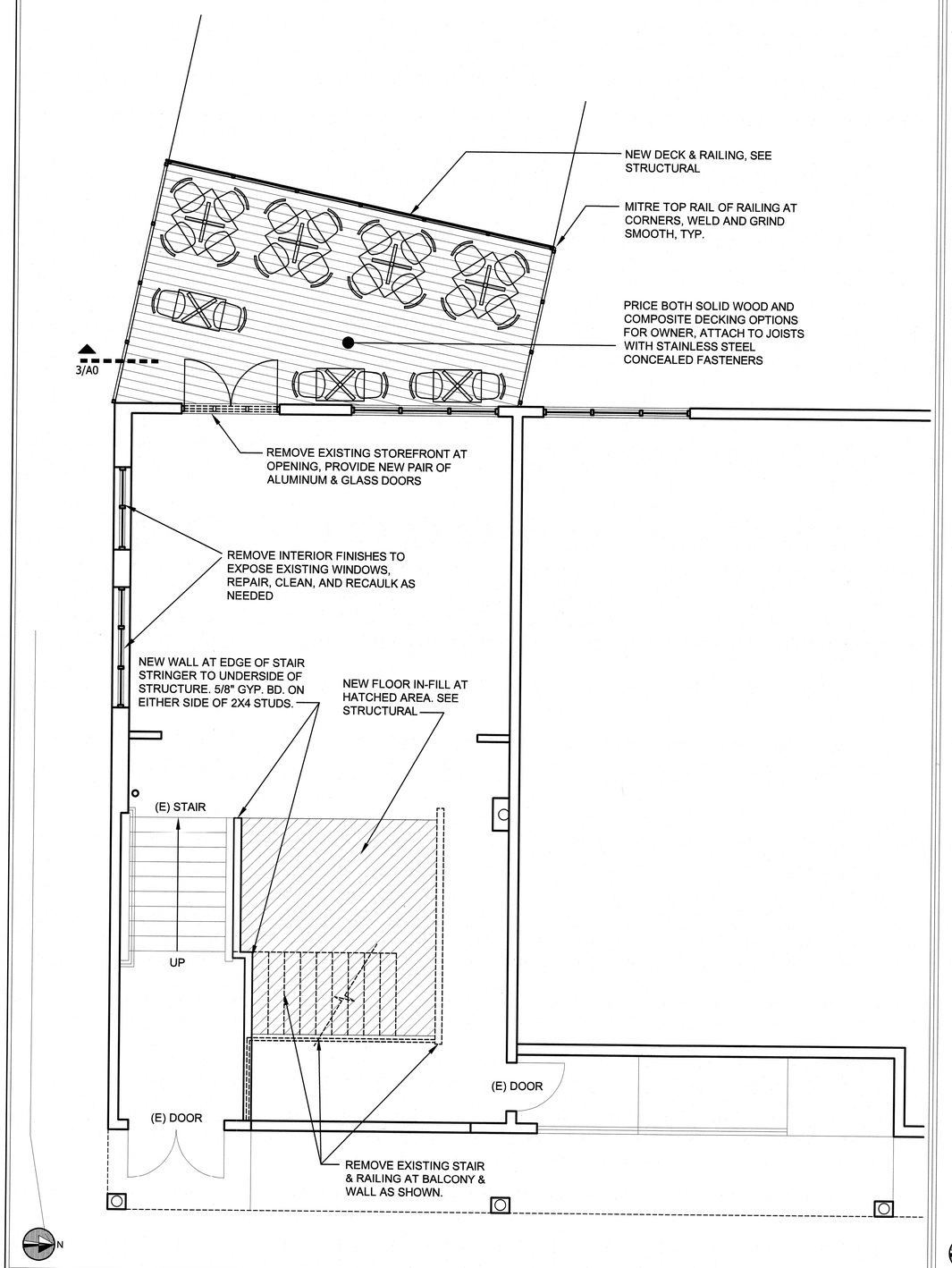

2 MAIN LEVEL FLOOR PLAN
1/4"=1'-0" NOTE:

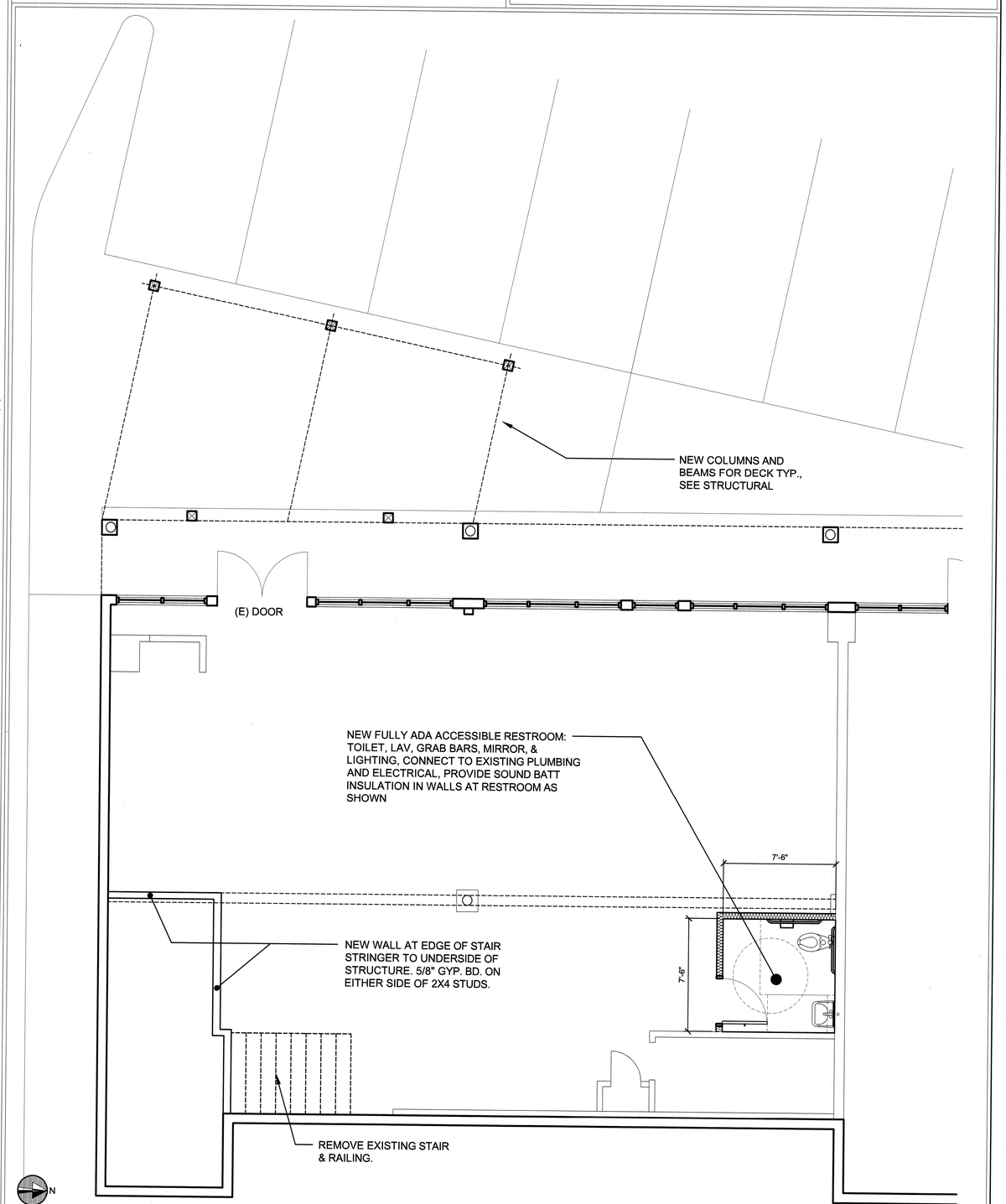

1 LOWER LEVEL FLOOR PLAN
1/4"=1'-0" NOTE:

CONSULTANT:
ethos ARCHITECTURE GROUP
8025 W. 25TH PL
LAKEWOOD, CO 80214
TEL: (303) 815-0161
WEB: www.ethos-arch-group.com

STATE OF COLORADO
JOHN SPONSELLER
203458
LICENSED ARCHITECT

GORE RANGE PLAZA
PARTIAL SHELL REMODEL
765 W. ANEMONE TRAIL
UNITS A & B
DILLON, CO 80435

Issue Record:
8.22.2019 FOR PLAN REVIEW

Revisions:

Drawn:
DRAWN BY: JS, KC

Checked:
CHECKED BY: JS

Project No.
19-218

Contents:
LOWER LEVEL AND MAIN LEVEL FLOOR PLANS

A1

Date of Last Print:
8.22.2019

STRUCTURAL NOTES RMG JOB #171791

1. APPLICABLE CODES:

A. These general notes apply to all structural drawings. This project is designed in accordance with the International Building Code (IBC), 2012 Edition, and the 'Minimum Design Loads for Buildings and Other Structures' (ASCE 7-10) and The Summit County, Colorado Building Code, (2012 Edition).

B. All material and workmanship shall be in accordance with applicable provisions of the codes specified above.

2. LOADS USED IN DESIGN:

A. Roof Snow Load: .... 75 psf
Roof Dead Load: .... 15 psf
B. Floor Live Load: .... 100 psf (Assembly Group A-2)
Floor Dead Load: .... 20 psf
C. Deck Live Load: .... 100 psf (Assembly Group A-2)
Deck Dead Load: .... 20 psf
D. Wind: Base Wind Speed, V3s .... 90 mph
Exposure .... 'B'
Wind Importance Factor, Iw 1.0

3. COORDINATION:

A. DO NOT SCALE. The layout shown is based solely on architectural plans and other written documentation by **Ethos Architecture Group**, for **765 W Anemone Tr, Units A and B**, received **7-18-19**. Changes affecting the layout shown must be specific and clearly conveyed to **Rocky Mountain Group** in written form as a change for inclusion into these plans. **Contractor and/or client shall verify all dimensions and layout prior to construction.** All dimensions on structural drawings shall be checked against architectural drawings and any discrepancies shall be brought to the attention of the Architect and Engineer immediately. Refer to mechanical, electrical and architectural drawings for openings not shown on structural drawings.

B. Shop drawings shall be prepared by the fabricator. Copying of these construction documents for use as shop drawings will not be permitted. Design team shall have 10 working days to review and return shop drawings for acceptance or resubmittal.

C. These construction documents were prepared with information about the existing building provided by others. No investigation of the existing building was undertaken. If the contractor discovers existing conditions which vary from those shown on these documents, he shall notify the Engineer of Record immediately for guidance on the necessary changes to be made.

D. All temporary shoring shall be the responsibility of the contractor. Removing or modifying partition or bearing walls could result in cosmetic damage. Shoring of the existing structure, prior to modification of the wall is the responsibility of the contractor. It should be noted that the process of shoring and modification of the wall can result in cracks appearing in the drywall or brittle finishes, such as stucco or tile floor. This cracking is typically aesthetic in nature and could occur throughout the house. RMG is not responsible for cosmetic damage that may occur.

E. Design is void after two years from original date of issue, unless updated to acceptable codes and practices at that time.

F. A preconstruction meeting with personnel of **Rocky Mountain Group**, the architect, contractor and appropriate subcontractors is strongly recommended prior to construction to discuss structural plans.

4. CONCRETE:

A. Concrete has been designed and shall be constructed in accordance with the American Concrete Institute 'Building Code Requirement Reinforced Concrete' and 'Specifications for Structural Concrete for Buildings' (ACI 318 and ACI 301) latest editions. Section 13 'Inspection' of ACI 318 is deleted in its entirety, see 'Field Observations' paragraph. All concrete shall be of stone aggregate, unless noted otherwise.

B. Concrete mixes:
See specifications for any additional durability requirements.
Mix 'A' For interior slabs on grade:
4,000 psi minimum compressive strength at age of 28 days.
Type I/II Cement, minimum of 540 pounds per cubic yard.
Fly ash not allowed.
1" maximum aggregate size.
3% Maximum air.
4" (8" with superplasticizer) maximum slump.
Water reducing agent:
Use in accordance with manufacturer's recommendations.
Mix 'B' For footings, grade beams, and miscellaneous concrete:
3,000 psi minimum compressive strength at age of 28 days.
Type I/II Cement, minimum of 470 pounds per cubic yard.
3/4" maximum aggregate size.
6%± 1% Entrained air.
4" (8" with superplasticizer) maximum slump.
Use in accordance with manufacturer's recommendations.

C. Reinforcing is to be new billet steel ASTM A615, Grade-60, except ties and bars to be welded shall be Grade-40. Provide not less than (2) #5 around all sides of all openings in concrete and extend 2'-0" past edges of openings. No splices of reinforcement are permitted except as detailed or authorized by structural engineer. Where permitted, use contact lap splices, (36) bar diameters minimum. Welded Wire Fabric (WWF.) shall be in accordance with ASTM A185. Lap (1) full mesh minimum at splices. No welding of reinforcement permitted unless detailed.

D. Placing of Reinforcement: Provide chairs, bolsters, additional reinforcement, and accessories necessary to support reinforcement at position shown on drawings. Support of reinforcement on form ties, wood, brick, brickbat or other unacceptable material, will not be permitted.

E. Grout under base plates and bearing plates shall be non-shrink, non-metallic grout with a minimum compressive strength in 28 days of 7,500 psi.

F. Reinforcement shall be placed so that the following minimum concrete protection is provided, unless noted otherwise:
1) Concrete surfaces poured against ground ... 3" Clear
2) Formed surfaces exposed to ground or weather:
a) Bars #6 and larger .... 2" Clear
b) Bars #5 and smaller .... 1 1/2" Clear
3) Slabs .... at center (u.n.o.)
4) Concrete not exposed to earth or weather .. 3/4"
5) Beams, Columns, Ties, Stirrups or spirals around primary reinforcement, or primary reinforcement with no ties, stirrups or spirals .... 1 1/2"

G. Foundation walls below grade shall have backfill placed equally on both sides until the required levels are reached. Walls shall be appropriately shored when backfill is placed on one side only.

H. The contractor is responsible for determining when it is safe to remove forms and/or shoring. Forms and shoring must not be removed until the walls are strong enough to carry their own weight and any anticipated superimposed loads. For foundation walls, this typically requires at least 12 hours of cumulative curing time at a temperature of 50°F or more. Concrete must be adequately covered during cold periods to maintain this surface temperature. Due to varying weather conditions, alternative curing processes, and the use of Type I/II cement, **Rocky Mountain Group** suggests forms remain in place a minimum of 3 days to assure this performance specification has been met. When forms are stripped there must be no excessive deflection or distortion or discoloration and no evidence of damage to the concrete. Adequate thermal protection of the concrete shall be continued after stripping for a cumulative period of 48 hours at 50°F, or more, after the initial pour. See applicable notes for specifications on when to backfill foundation walls.

5. SPREAD FOOTING FOUNDATIONS:

A. The foundation design has been completed in accordance with pertinent standards, recommended design soil parameters, accepted engineering design procedures, and is based on the best information available at the time of completion. The design is intended to minimize differential movement as described in the reference Geotechnical Report. It must be recognized that foundation components will undergo movement. It shall be the responsibility of the contractor and/or present owner to inform any subsequent owners of the soil condition and advised to maintain good practices in the future with regard to surface and subsurface drainage, framing of partitions above floor slabs, and finish work above the floor slabs, etc.

B. Foundation Design parameters include an assumed allowable bearing pressure of **2000** psf with no minimum dead load requirement.

C. An open excavation observation by a licensed Colorado engineer **SHALL BE PERFORMED PRIOR TO CONSTRUCTION** to observe the open excavation to determine that the soil type and conditions are consistent with design criteria of the soil report. If the soil properties are found to be different from this criteria, the foundation engineer shall be promptly notified so that the foundation design may be reviewed.

D. The contractor shall be responsible to coordinate the location of mechanical openings, floor drains, inserts, depressions, buried cables and utilities, etc. with architectural, civil, mechanical and electrical drawings.

E. Locate beam pockets and windows per structural / architectural plans. No beam pocket shall be within 16" clear of window frame. Drape horizontal reinforcing below pockets as required.

F. Mechanically compact all interior and exterior backfill per Geotechnical engineers recommendations. It will also be necessary to adjust and maintain the grade immediately against foundations periodically to avoid the creation of a water trap as the backfill settles over time.

G. Slope backfill away from the building a minimum of 10% for the first 10 feet (2% at paved areas) unless a more stringent requirement is specified by the Geotechnical engineer. Carry roof drains across the backfilled areas. Do not allow water to stand or pond near the building. Do not flood the backfill.

H. Contact Geotechnical engineer for proper preparation of subgrade for placement of floor slabs.

I. Floor slabs have a high probability of moving vertically. Floor slabs shall be separated from all structural portions of building with an expansion joint of minimum 1/2" thick Styrofoam or other approved joint material. A gap in non-bearing partitions, the non-rigid connections with the stairway construction and non-rigid construction of door jambs may be required by the Geotechnical engineer. If required, these items may also require reconstruction over the life of the structure to maintain the independent vertical movement of the floor slabs.

J. Unless a specific top of wall connection is shown, **foundation wall stability is not dependent on floor framing for lateral support.** A stud wall (cripple wall) or maximum of (3) 2x4 or (4) 2x6 plates (in addition to embedded mudsill) are allowed along the top of the foundation wall (including garden level walls) unless noted otherwise. Walls having backfill on both the interior and exterior faces should have backfill on either side brought up approximately together. Otherwise, where possible, no exterior backfill should be placed until the floor slab is in place or the bottom of the foundation wall is otherwise properly braced. Top of wall must also be braced if backfill is placed within 14 days of concrete pour.

6. STRUCTURAL STEEL:

A. Structural steel, including cast in angles, plates or other sections shall be detailed and erected in accordance with the American Institute of Steel Construction (AISC) Specifications and Code of Standard Practice, latest edition.

B. All wide flange and channel structural steel shall conform to ASTM A992. All other structural shapes and miscellaneous steel shall conform to ASTM A36 unless otherwise noted. Tube steel columns shall conform to ASTM A500, Grade-B. Pipe columns shall conform to ASTM A53.

C. Column base plates shall be set on 1 1/2" non-shrink grout with a minimum of (4) 3/4" diameter x 1'-0" anchor bolts, unless noted otherwise.

D. Shop connections shall be welded with E70xx electrodes and ground smooth where exposed. Field connections shall be made with bolts conforming to ASTM A325N unless otherwise noted. Field welds shall be made with E70xx electrodes. All welding shall be in accordance with AWS 'Structural Welding Code', latest edition and performed by certified, licensed welder.

E. All beam connections not detailed on the drawings shall be standard framed beam connections as shown in Table II and III of the AISC 'Manual of Steel Construction', latest edition, designed to carry the full capacity of the uniformly loaded member, unless noted otherwise.

F. Field Quality Control: Inspect in accordance with AISC specifications. Materials engineer shall visually inspect all field welded connections and visually inspect all bolted connections to ascertain that all welds, bolts, nuts and required washers have been installed and are of proper type and that all facing surfaces have been brought into snug contact.

7. WOOD:

A. Framing lumber shall be Hem Fir (unless noted otherwise) and as follows or better:
2x4 studs .... Stud Grade
2x6 or larger studs.... #2 Grade
Plates............... #3 Grade
Deck Joists .... DF #2
2x and 4x Beams ...... #2 Grade
6x or larger Beams .... #1 Grade Beam and Stringer
Glu-Lam Beams .... 24F-V4 DF/DF unless noted otherwise
Posts................ #1 Grade Post and Timber

B. All wood construction shall be in conformance with the provisions of 'The National Design Specification for Wood Construction', latest edition.

C. Laminated Veneer Lumber (LVL) and prefab joists shall be manufactured by 'TrusJoist' or equivalent or shall meet APA Performance Standards, and installed per manufacturers specifications. Supplier shall furnish shop drawings showing all joists, bridging, blocking and miscellaneous accessories for review by the structural engineer prior to fabrication.

D. Where not otherwise shown on plans, all nailing or screwing shall be as indicated in the Building Code. All sheathing must be nailed. Adhesives **SHALL NOT** be used in place of nailing.

E. Metal connectors to be provided by 'Simpson Strong-Tie' or equivalent.

F. APA rated OSB may be used in lieu of plywood with prior approval from Engineer of Record.

G. Wood roof and floor trusses shall be designed by others unless noted otherwise. Calculated live load deflection of trusses shall not exceed L/360 for floors and L/240 for roof of the overall span length. The truss supplier shall provide shop drawings and calculations prepared and stamped by a structural engineer registered in the state of Colorado for review by the Engineer of Record to verify they conform to requirements of the basic structure. These shop drawings shall show the locations of all trusses, connection plate sizes & capacity and the size & grade of lumber to be used. Truss fabrication shall not proceed until completion of shop drawing review by the Engineer of Record. Truss manufacturer or contractor shall provide blocking at bearing locations and bridging/lateral bracing as required for truss stability.

H. Site fabricated trusses are to be adequately shored and installed by qualified personnel. Appropriate bracing shall be in place at all times.
Rocky Mountain Group is not responsible for the construction sequence of site built trusses.

I. Floor sheathing shall conform to the provisions of tables:
2304.7 (1), 2304.7 (2), 2304.7 (3) or 2304.7 (4) in the **2012** IBC.

J. The contractor shall not cut, notch or otherwise modify joists, beams, or trusses without the written consent of the Engineer of Record.

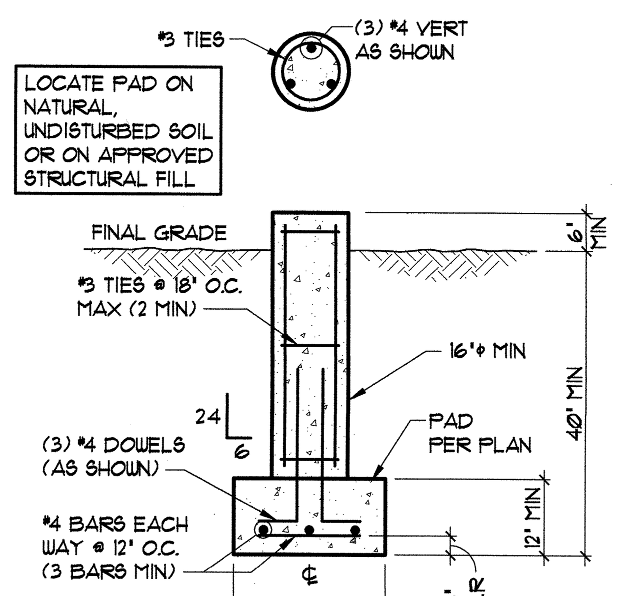

A PIER DETAIL
SCALE: 1/2" = 1'-0"

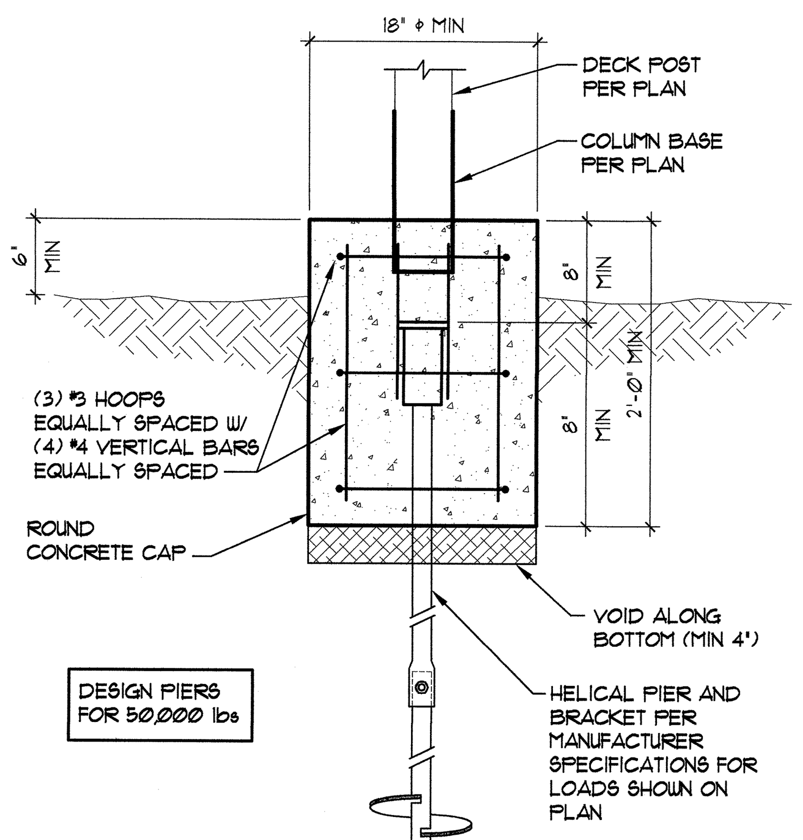

B ISOLATED PIER CAP
SCALE: 1" = 1'-0"

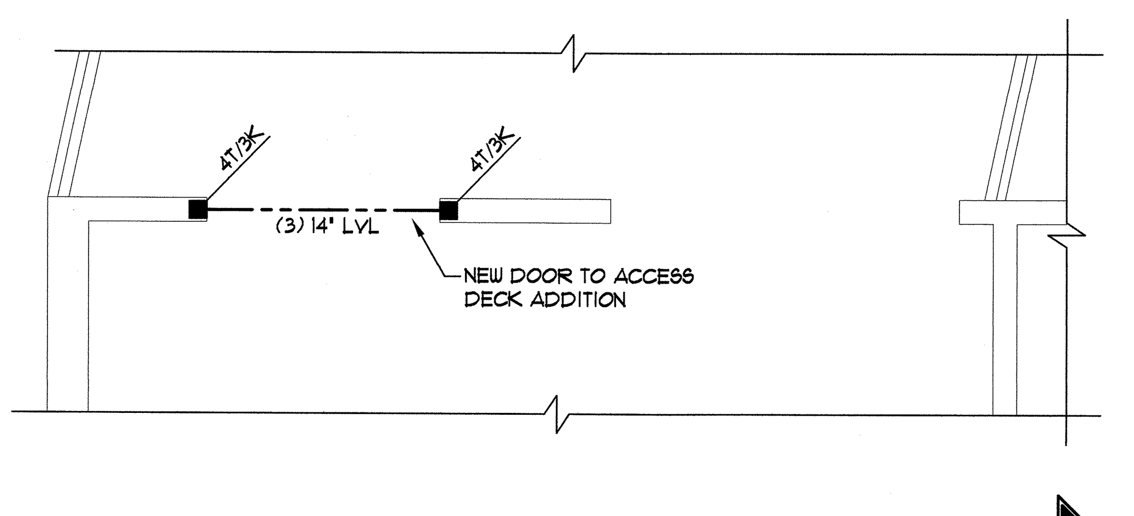

PARTIAL UPPER FLOOR FRAMING PLAN

NORTH

SCALE: 1/4" = 1'-0"

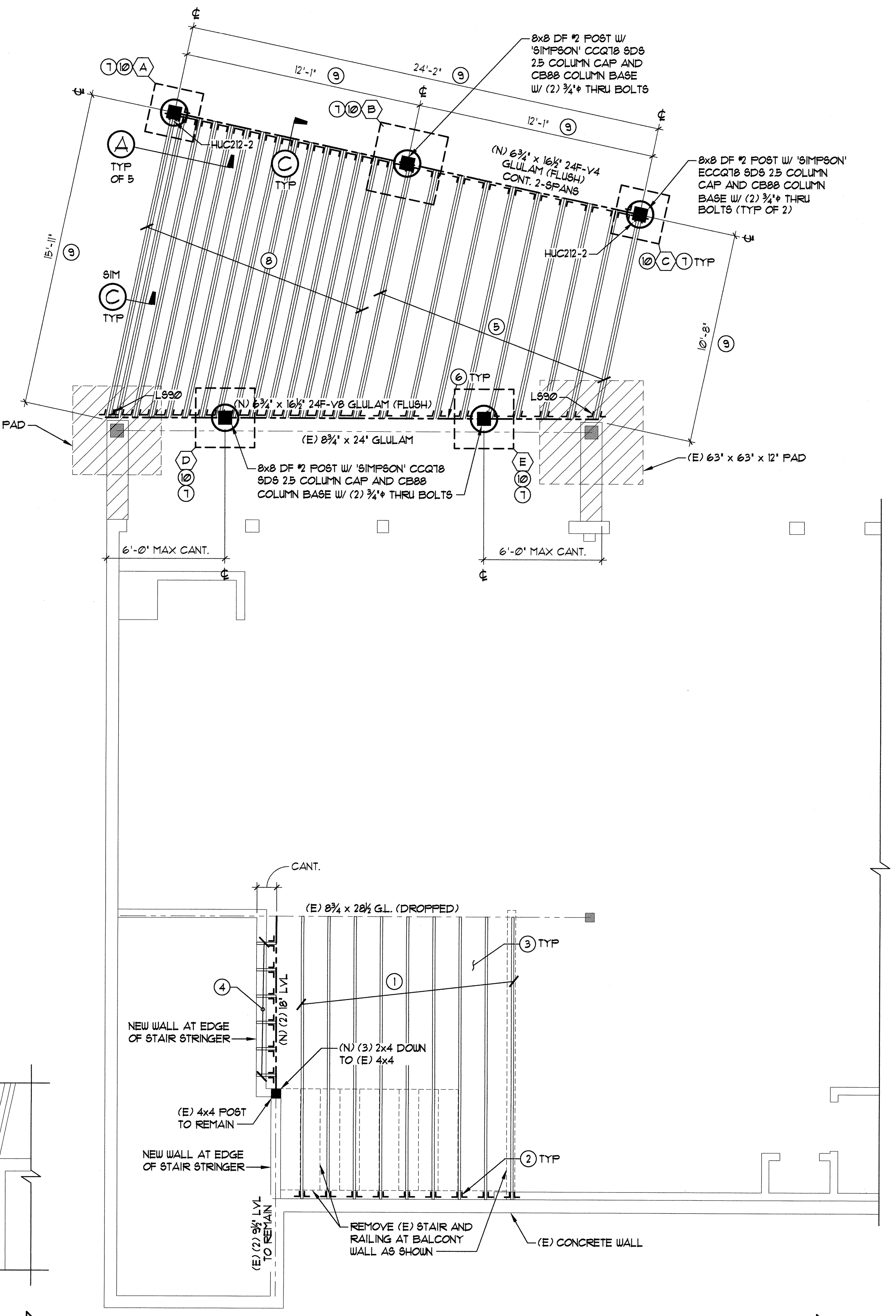

MAIN LEVEL FLOOR AND DECK FRAMING PLAN

NORTH

SCALE: 1/4" = 1'-0"

PAD SCHEDULE

A	30" x 30" x 12"
B	42" x 42" x 12"
C	30" x 30" x 12"
D	36" x 36" x 12"
E	36" x 36" x 12"

STRUCTURAL LEGEND

X / SX	DETAIL # OR LETTER / SHEET DETAIL IS ON
(1)	SEE PLAN NOTES
LA ■	SOLID BOX INDICATES LOAD FROM ABOVE (CONTINUE POST DOWN TO FOUNDATION BELOW)
LA □	OPEN BOX INDICATES LOAD FROM ABOVE (CARRIED BY BEAM OR HEADER BELOW)
⟵⟶	JOIST/RAFTER SPAN
CANT	CANTILEVER JOIST
	HANGER (PER PLAN)
----	HEADER / BEAM
═══	BEARING WALL (INTERIOR)
	JOIST/RAFTER SPAN (BEAR ON BEAM)
	JOIST/RAFTER SPAN (FLUSH FRAME TO BEAM)
A.B.	ANCHOR BOLT
CANT	CANTILEVER
¢	CENTER LINE
ϕ	DIAMETER
(E)	EXISTING
F.F.	FINISH FLOOR
K	KING STUD
K.P.	KING POST
LLH	LONG LEG HORIZONTAL
LLV	LONG LEG VERTICAL
LVL	LAMINATED VENEER LUMBER
MAX.	MAXIMUM
M=L	MICRO-LAM
(N)	NEW
O.C.	ON CENTER
O.S.B.	ORIENTED STRAND BOARD
PL	PLATE
P.T.	PRESSURE TREATED
REV	REVERSE
R.S.	ROUGH SAWN
SIM	SIMILAR
T	TRIMMER
TYP	TYPICAL

GENERAL PLAN NOTES

* **FLOOR SHEATHING:**
23/32" APA RATED OSB OR PLYWOOD W/ 10d NAILS @ 6" O.C. ALONG ALL SUPPORTED PANEL EDGES AND 12" O.C. IN FIELD

* **EXTERIOR WALLS:**
SHALL BE 2x6 STUDS @ 16" O.C. (TYP. - UNLESS NOTED OTHERWISE). EXTERIOR WALLS TO BE CONTINUOUSLY SHEATHED W/ 7/16" OSB W/ 8d's @ 6" O.C. AT PANEL EDGES AND 12" O.C. IN THE FIELD (TYP - UNLESS NOTED OTHERWISE)

* **INTERIOR WALLS:**
SHALL BE 2x STUDS @ 16" O.C. RE: ARCH'L PLANS FOR THICKNESSES (TYP. - UNLESS NOTED OTHERWISE)

* **BUILT-UP STUD COLUMNS:**
SHALL BE CONTINUED DOWN TO FOUNDATION OR OTHER SUPPORTING MEMBER. BUILT-UP COLUMNS SHALL BE BLOCKED SOLID AT THE FLOOR SYSTEM

* **MULTI-PLY BEAMS:**
CONSISTING OF (3) OR MORE MEMBERS SHALL BE SECURED TOGETHER W/ (1) 1/2"ϕ THRU BOLT @ 16" O.C. STAGGERED (OFFSET EA. BOLT 2 1/2" FROM ¢ OF BEAM)

* **FLUSH FRAMED (SIDE LOADED):**
BUILT-UP LVL BEAMS CONSISTING OF (3) OR MORE MEMBERS SHALL BE SECURED TOGETHER W/ (2) 1/2"ϕ THRU BOLTS @ 16" O.C. (OFFSET EACH BOLT 2 1/2" FROM ¢ OF BEAM)

* **DROP FRAMED (TOP LOADED):**
BUILT-UP LVL BEAMS CONSISTING OF (4) OR MORE MEMBERS SHALL BE SECURED TOGETHER W/ (2) ROWS OF 1/2"ϕ THRU BOLTS STAGGERED @ 24" O.C. (OFFSET EACH BOLT 2 1/2" FROM ¢ OF BEAM)

PLAN NOTES

1. 18" BCI 90 2.0 FLOOR JOISTS @ 16" O.C. W/ 2x4 VERTICAL WEB STIFFENERS AT EACH END PER MANUFACTURER'S RECOMMENDATIONS.
2. 'SIMPSON' HU416 W/ (20) 1/4" x 1 3/4" CONCRETE TITEN 2 SCREWS INTO (E) CONCRETE WALL
3. FLOOR SHEATHING TO BE 23/32" MIN OSB OR PLYWOOD W/ 10d NAILS @ 6" O.C. ALONG ALL SUPPORTED PANEL EDGES AND 12" O.C. IN FIELD
4. 18" BCI 90 2.0 FLOOR JOISTS @ 16" O.C. W/ INVERTED 'SIMPSON' HU416 HANGERS AT THE (2) 18" LVL
5. (2) 2x12 DF #2 @ 16" O.C. W/ LUS210-2 FACE MOUNT HANGERS AND HU212-2 HANGERS WHERE SKEWED
6. LAG (N) 6 3/4" x 24" GLULAM TO (E) 8 3/4" x 24" GLULAM W/ (3) 3/4"ϕ x 12" LAGS @ 16" O.C. EQUALLY SPACED VERTICALLY
7. DIFFERENTIAL MOVEMENT IS MORE LIKELY IF PIERS/PADS ARE NOT TIED TO MAIN FOUNDATION SYSTEM
8. (2) 2x12 DF #2 @ 10" O.C. W/ LUS210-2 FACEMOUNT HANGERS AND HU212-2 HANGERS WHERE SKEWED
9. VERIFY DIMENSION PRIOR TO CONSTRUCTION
10. SEE DETAIL (B) FOR HELICAL PIER OPTION

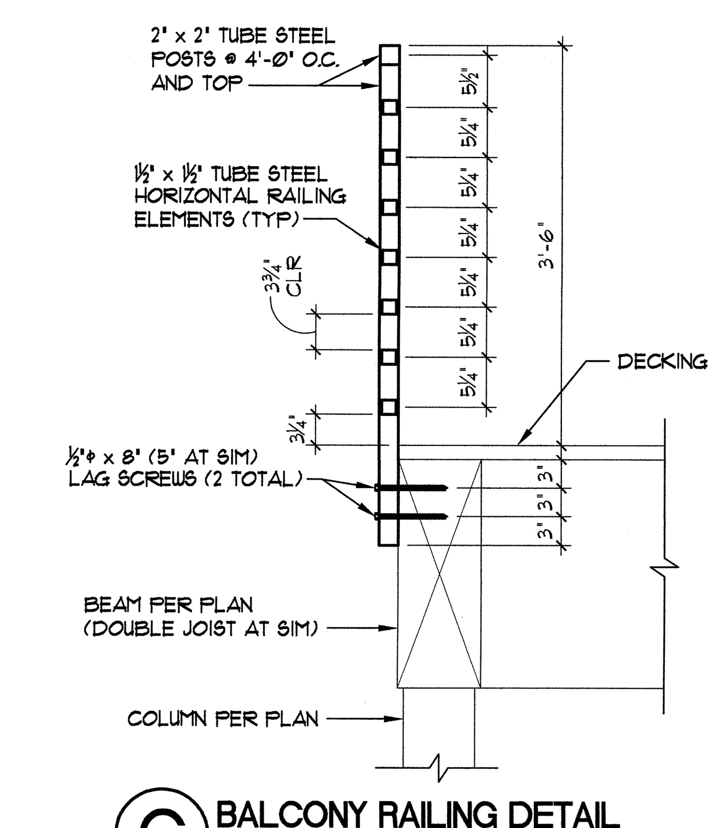

C BALCONY RAILING DETAIL
SCALE: 3/4" = 1'-0"

CONSULTANT:
ROCKY MOUNTAIN GROUP
RMG ENGINEERS ARCHITECTS EMPLOYEE OWNED
Geotechnical Materials, Testing Civil, Planning
Architectural Structural Forensics
DENVER METRO
14 INVERNESS DR. E., SUITE E-136, ENGLEWOOD, CO 80112
(303) 688-9475 ~ WWW.RMGENGINEERS.COM
SOUTHERN COLORADO, DENVER METRO, NORTHERN COLORADO

COLORADO LICENSED PROFESSIONAL ENGINEER
COLETTE ANN SMITH
8/22/19
28698

GORE RANGE PLAZA
PARTIAL SHELL REMODEL
765 W. ANEMONE TRAIL
UNITS A & B
DILLON, CO 80435

Issue Record:
08-22-2019 FOR PLAN REVIEW

Revisions:

Drawn: RSR

Checked: CAS

RMG Project No. 171791

Contents:

UPPER FLOOR FRAMING PLAN, MAIN FLOOR AND DECK FRAMING PLAN AND NOTES

S1

Date of Last Print:
08-22-2019